DWG NO.	SH	REV
1248–20		

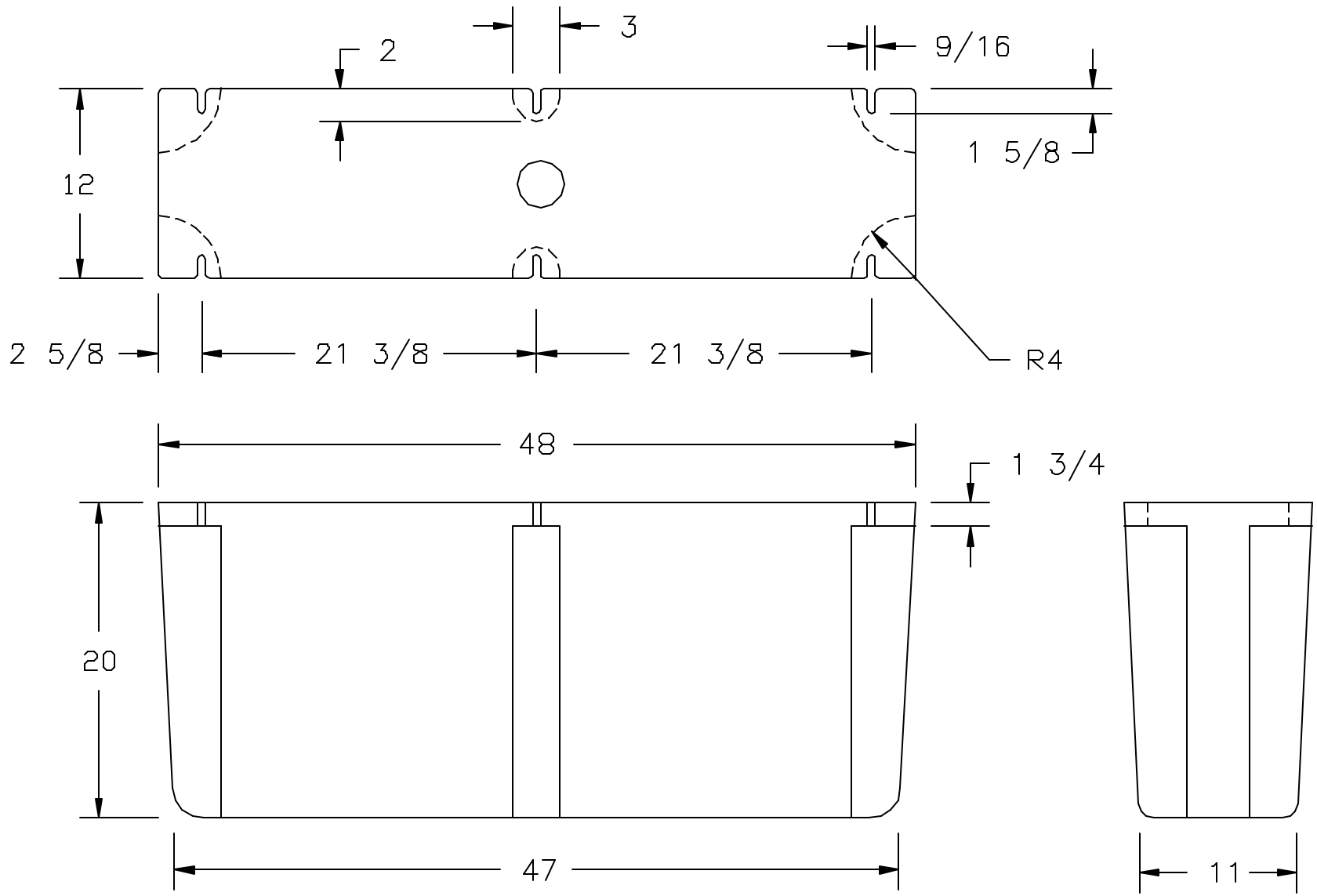

REV	DESCRIPTION	DATE	APVD
1	CHANGE WEIGHTS	11–17–94	

DRAWN: DEAN — DATE: 4–19–94

APPROVED — DATE

MATERIAL: POLYETHYLENE .150 NOM. WALL

SCALE: NONE

UOS DIMENSIONS ARE IN INCHES
GENERAL TOLERANCES
± 1% @ 68° F

THIRD ANGLE PROJECTION

PART WEIGHT: AF 20 LBS. FF 29 LBS.

ACE ROTO–MOLD

PART NO. 1248–20

SIZE A — DWG NO. 1248–20 — REV