PROPRIETARY DATA
INFORMATION FURNISHED HEREIN IS THE PROPERTY OF DEN HARTOG INDUSTRIES INC. AND SHALL NOT BE USED, DISCLOSED TO OTHERS, OR COPIED WITHOUT EXPRESSED WRITTEN CONSENT OF DEN HARTOG IND. ALL RIGHTS RESERVED.

(B) FFMB-32FRND B

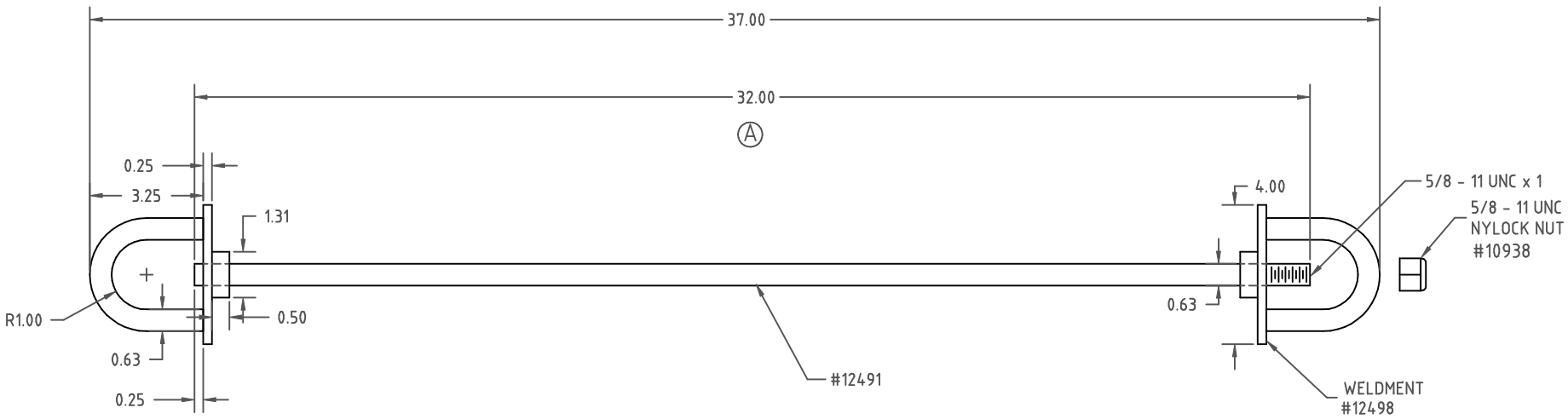

REV	DESCRIPTION	DATE APPRD.	CCN
B	CHANGED P.N.	10/27/10 REH	2106
A	ADD TO LENGTH WAS 31.75	6/11/09 DHJ	

DRAWN /DATE: DHJ 10/17/07

APPRD. /DATE: REH 2/19/09

MATERIAL: MILD STEEL GALVANIZED FINISH

ALL DIMENSIONS ARE IN DECIMAL INCHES
TOLERANCES UNLESS OTHERWISE SPECIFIED
± .062

THIRD ANGLE PROJECTION
ANSI 14.5M

NOTES:

Ace Roto-Mold
A DIVISION OF DEN HARTOG INDUSTRIES, INC.
4010 HOSPERS DRIVE S., BOX 425, HOSPERS, IOWA 51238

CLIENT / DESCRIPTION: MOORING BUOY HARDWARE 32" FIXED

SCALE: NONE

PART NO.: FFMB-32FRND